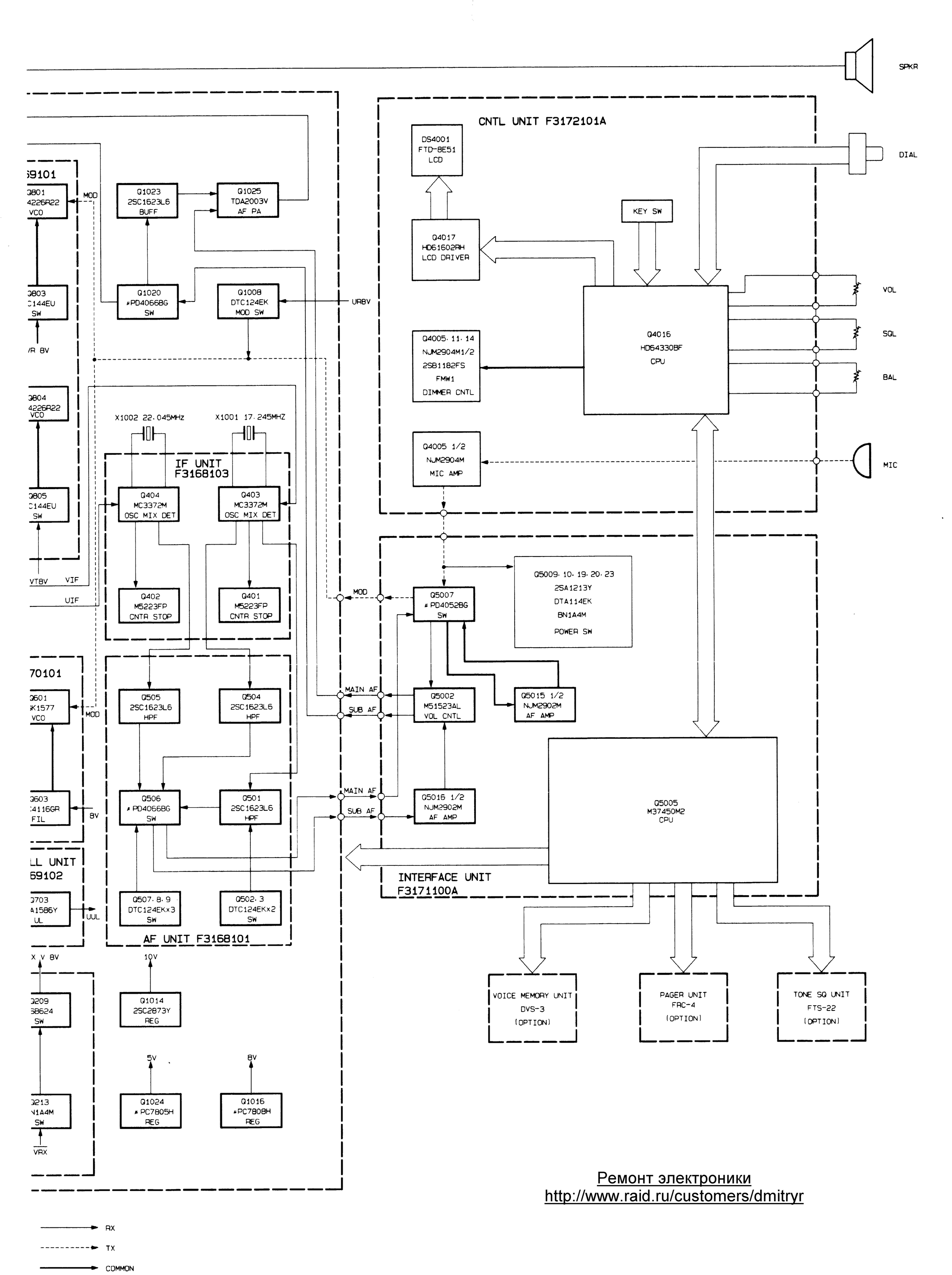

Ремонт электроники
http://www.raid.ru/customers/dmitryr

144 PA UNIT F3167101

Ремонт электроники
http://www.raid.ru/customers/dmitryr

✱	10W	50W	25W
Q101	M57715	S-AV24	M57737
D101	M1407	UM9415	—
C122	3P	8P	—
C121	1P	5P	—

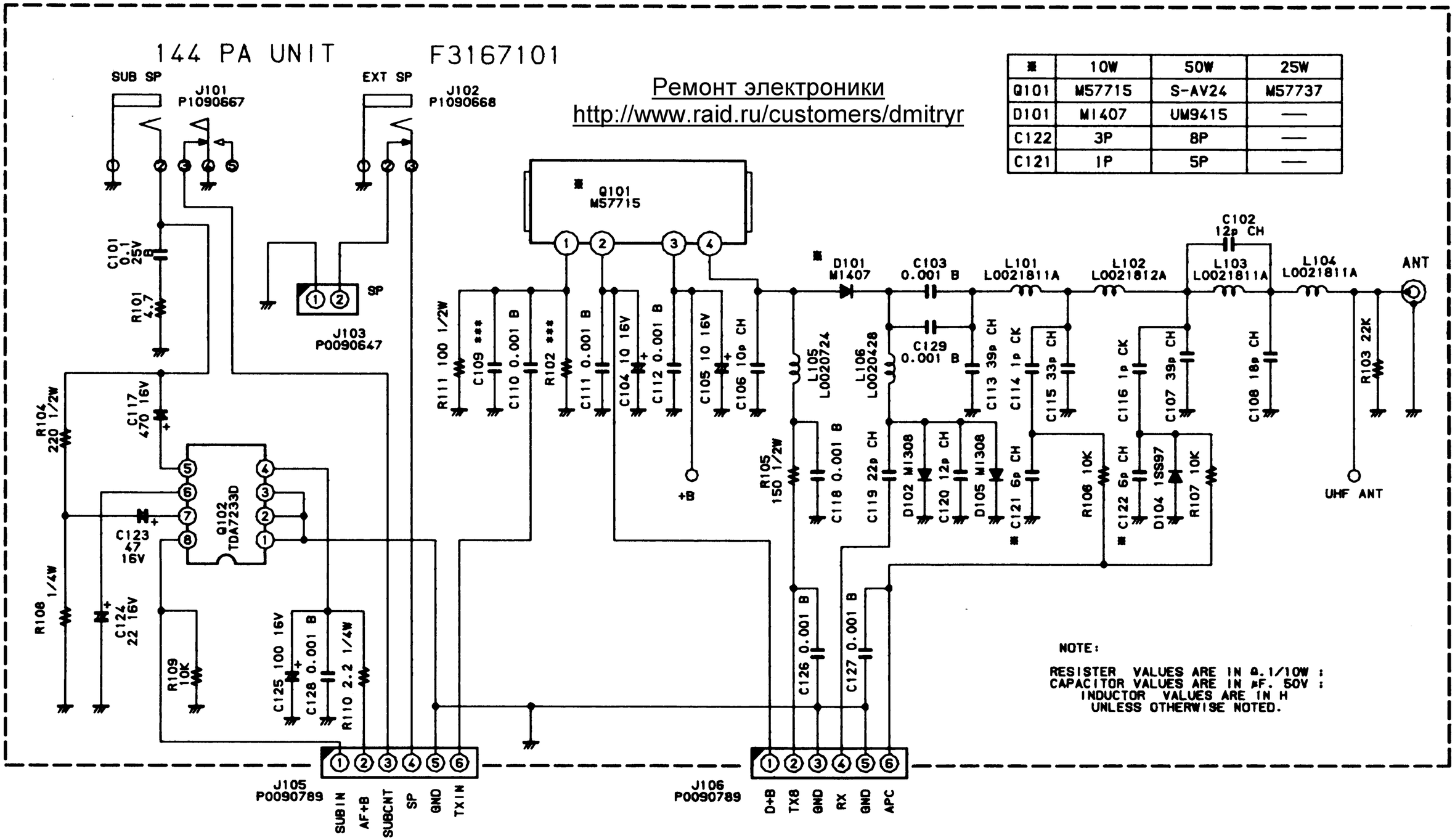

NOTE:

RESISTER VALUES ARE IN Ω.1/10W :
CAPACITOR VALUES ARE IN μF. 50V :
INDUCTOR VALUES ARE IN H
UNLESS OTHERWISE NOTED.

Ремонт электроники
http://www.raid.ru/customers/dmitryr

INTERFACE UNIT

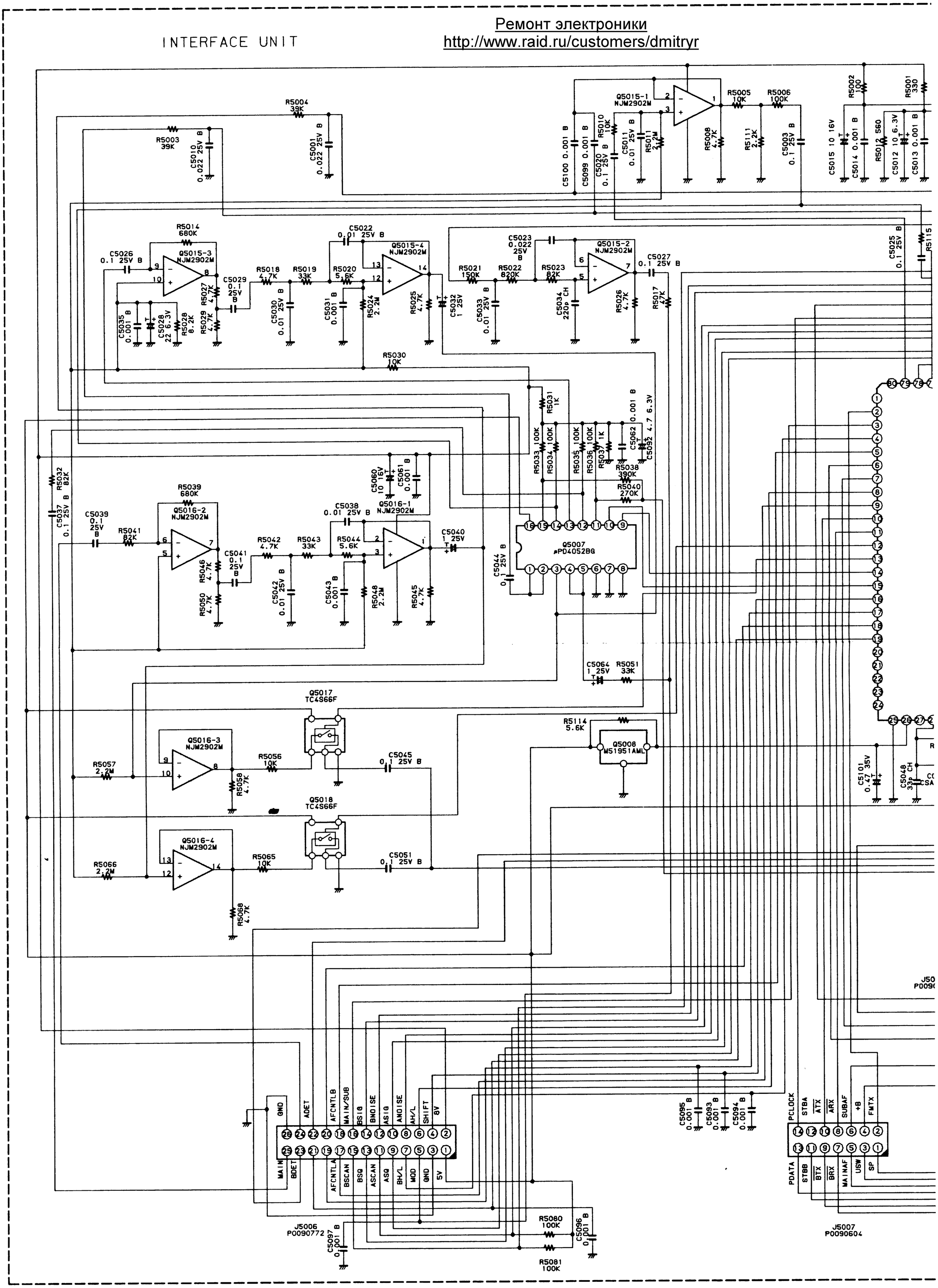

Ремонт электроники
http://www.raid.ru/customers/dmitryr

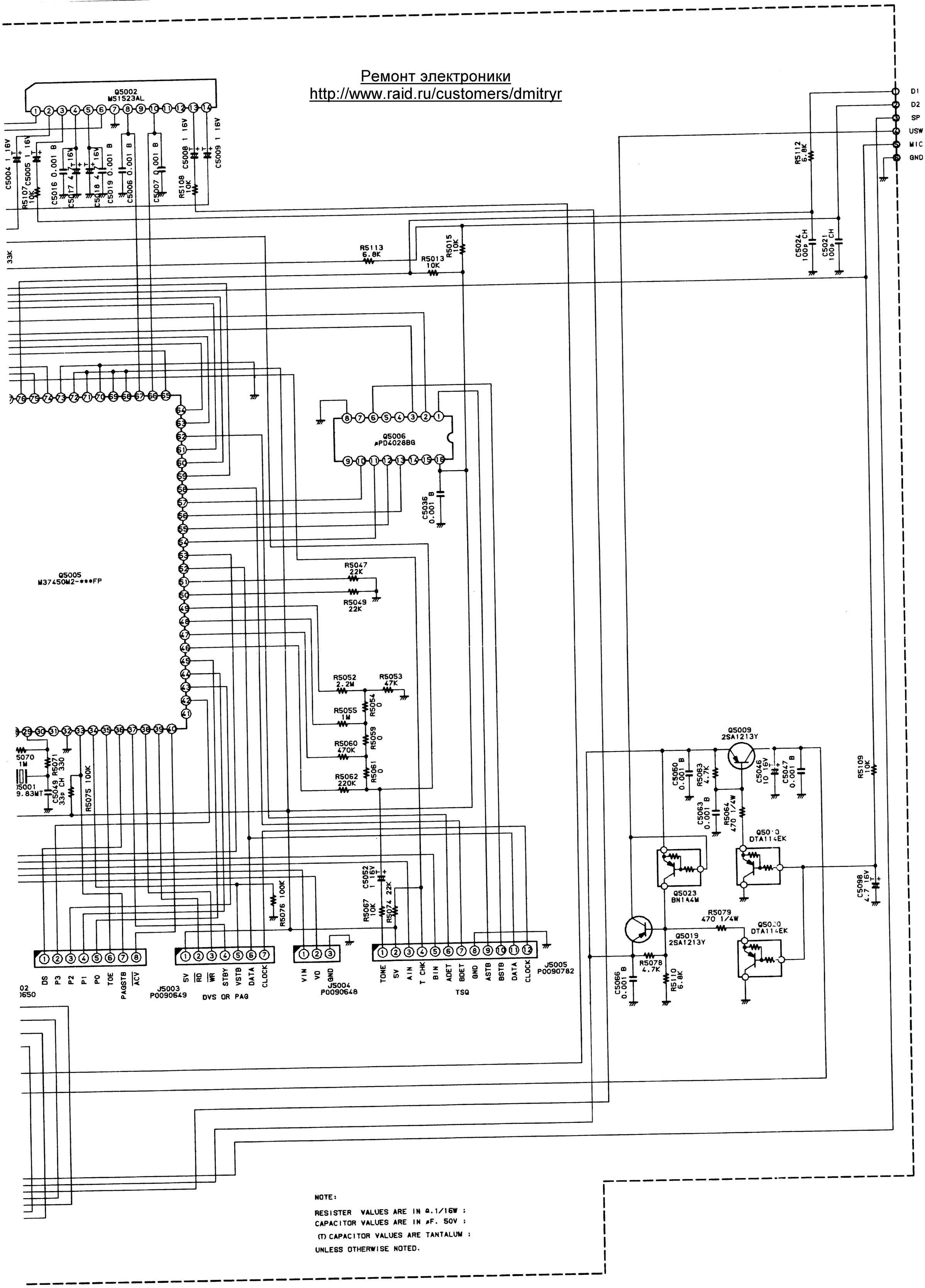

NOTE:

RESISTER VALUES ARE IN Ω.1/16W ;
CAPACITOR VALUES ARE IN μF. 50V ;
(T) CAPACITOR VALUES ARE TANTALUM ;
UNLESS OTHERWISE NOTED.

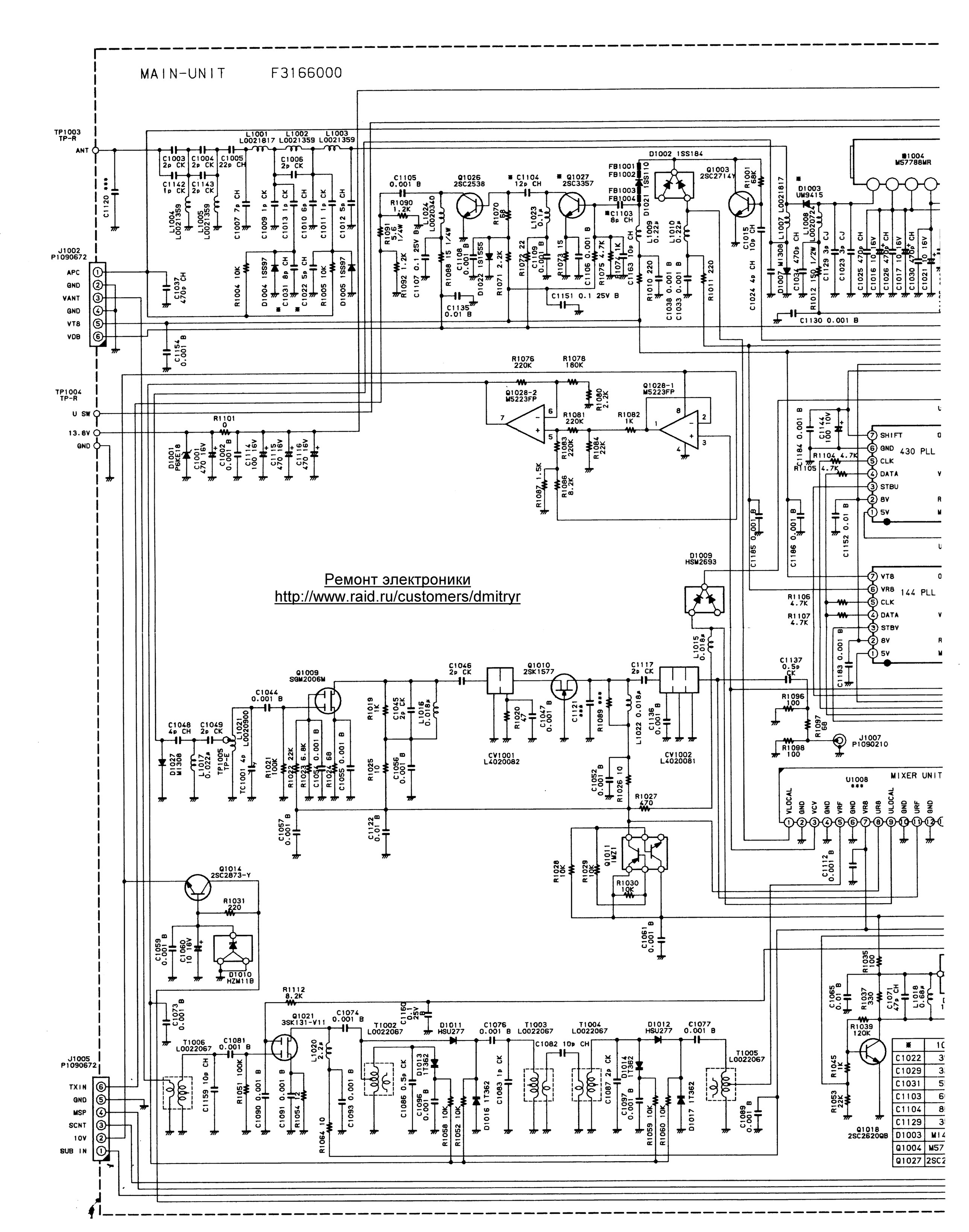
MAIN-UNIT F3166000
TP1003 TP-R
ANT
J1002 P1090672
APC
GND
VANT
GND
VT8
VDB
TP1004 TP-R
U SW
13.8V
GND
J1005 P1090672
TXIN
GND
MSP
SCNT
10V
SUB IN
Q1009 SGM2006M
Q1010 2SK1577
CV1001 L4020082
CV1002 L4020081
Q1014 2SC2873-Y
D1010 HZM11B
Q1021 3SK131-V11
Q1011 1MZ1
D1009 HSM2693
Q1028-2 M5223FP
Q1028-1 M5223FP
Q1026 2SC2538
Q1027 2SC3357
Q1003 2SC2714Y
D1002 1SS184
D1003 UM9415
■1004 M57788MR
430 PLL
144 PLL
SHIFT
GND
CLK
DATA
STBU
8V
5V
VT8
VR8
CLK
DATA
STBV
8V
5V
J1007 P1090210
MIXER UNIT
U1008 ***
VLOCAL
GND
VCV
GND
VRF
GND
VR8
UR8
ULOCAL
GND
URF
GND
Q1018 2SC2620QB
Ремонт электроники
http://www.raid.ru/customers/dmitryr

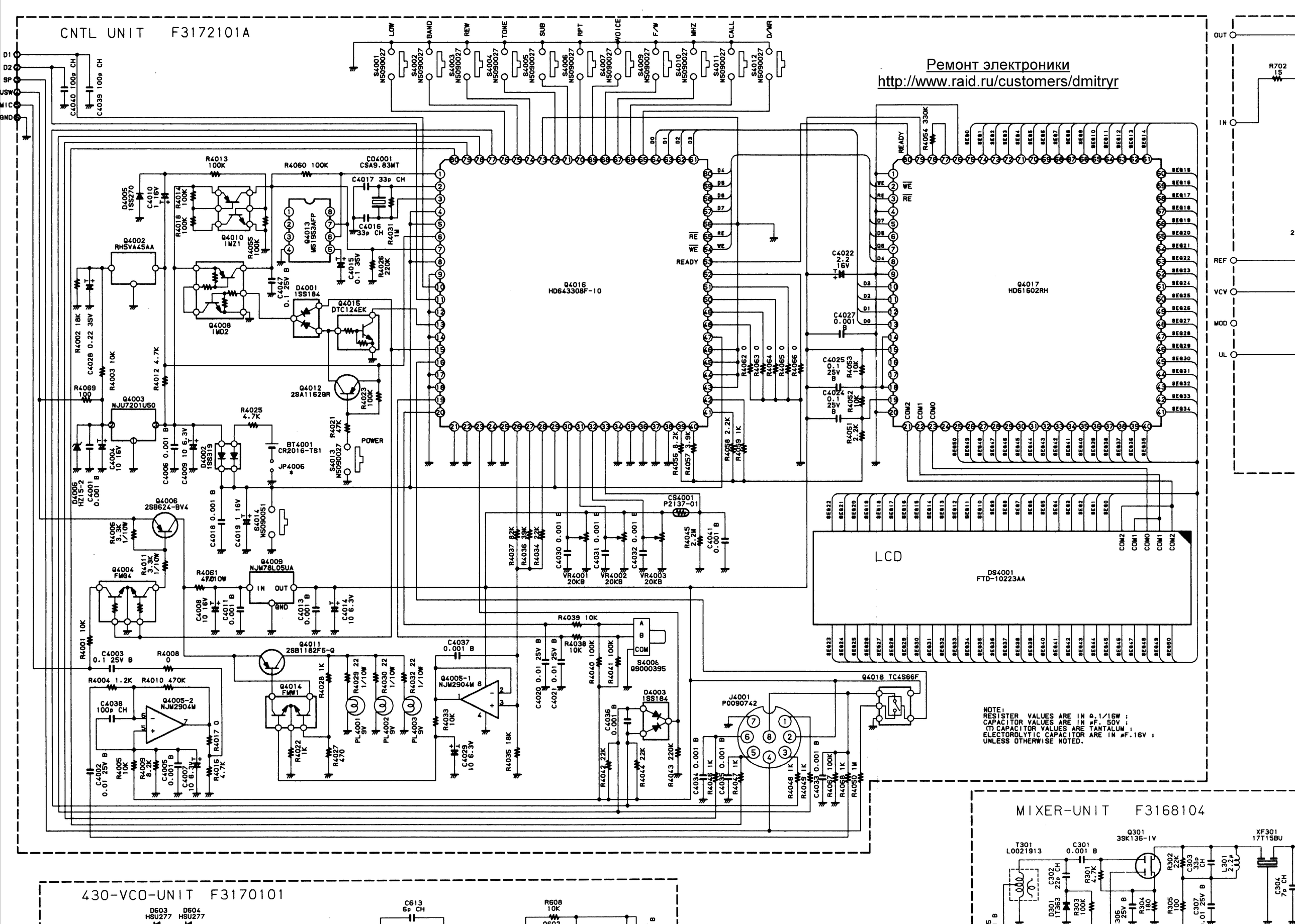
CNTL UNIT F3172101A
Ремонт электроники
http://www.raid.ru/customers/dmitryr
Q4016 HD643308F-10
Q4017 HD61602RH
LCD
DS4001 FTD-10223AA
MIXER-UNIT F3168104
430-VCO-UNIT F3170101
NOTE:
RESISTER VALUES ARE IN Ω.1/16W ;
CAPACITOR VALUES ARE IN μF. 50V ;
(T) CAPACITOR VALUES ARE TANTALUM ;
ELECTOROLYTIC CAPACITOR ARE IN μF.16V ;
UNLESS OTHERWISE NOTED.

430-VCO-UNIT F3170101

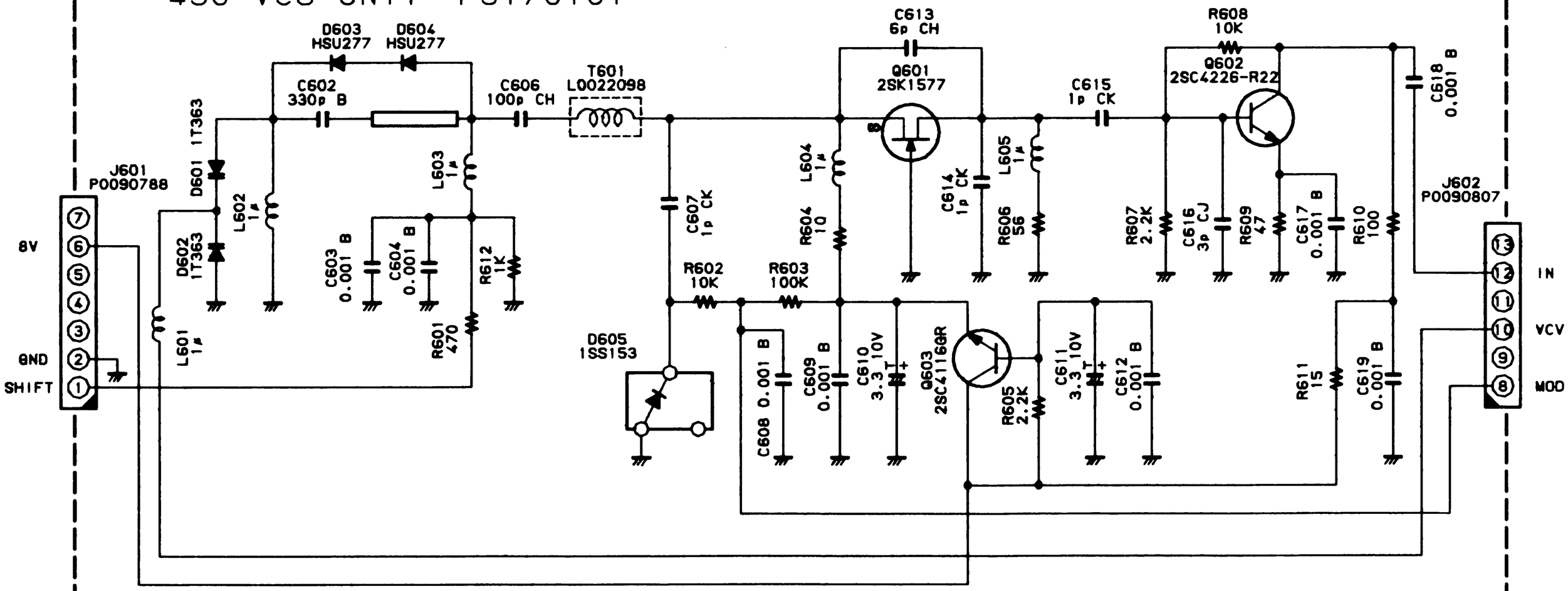

NOTE:
RESISTER VALUES ARE IN Ω.1/16W ;
CAPACITOR VALUES ARE IN μF. 50V ;
(T) CAPACITOR VALUES ARE TANTALUM ;
INDUCTOR VALUES ARE IN H
UNLESS OTHERWISE NOTED.

Ремонт электроники
http://www.raid.ru/customers/dmitryr

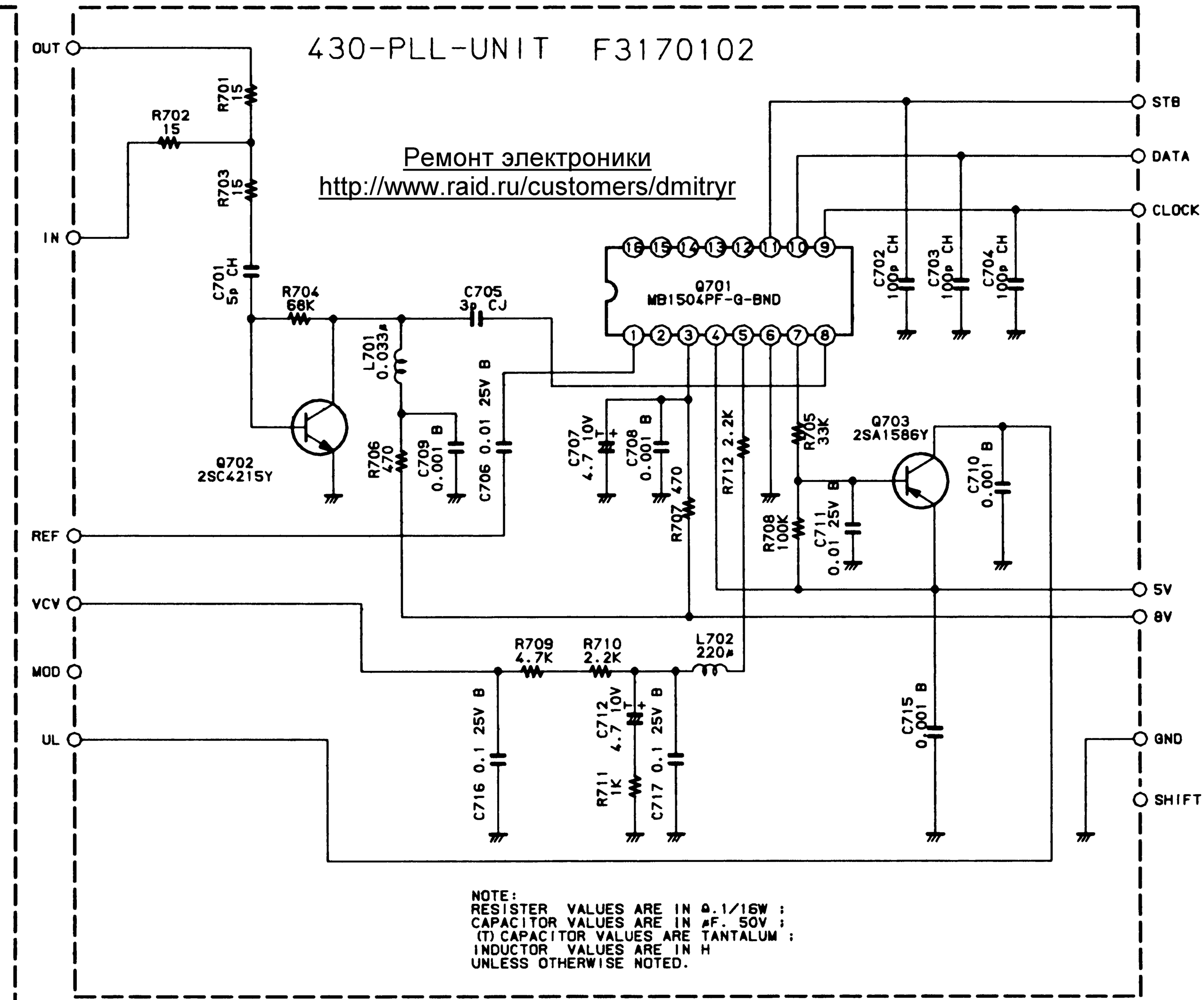

Ремонт электроники
http://www.raid.ru/customers/dmitryr

NOTE:
RESISTER VALUES ARE IN Ω.1/16W ;
CAPACITOR VALUES ARE IN μF. 50V ;
(T) CAPACITOR VALUES ARE TANTALUM ;
INDUCTOR VALUES ARE IN H
UNLESS OTHERWISE NOTED.

MIXER-UNIT F3168104

Ремонт электроники
http://www.raid.ru/customers/dmitryr

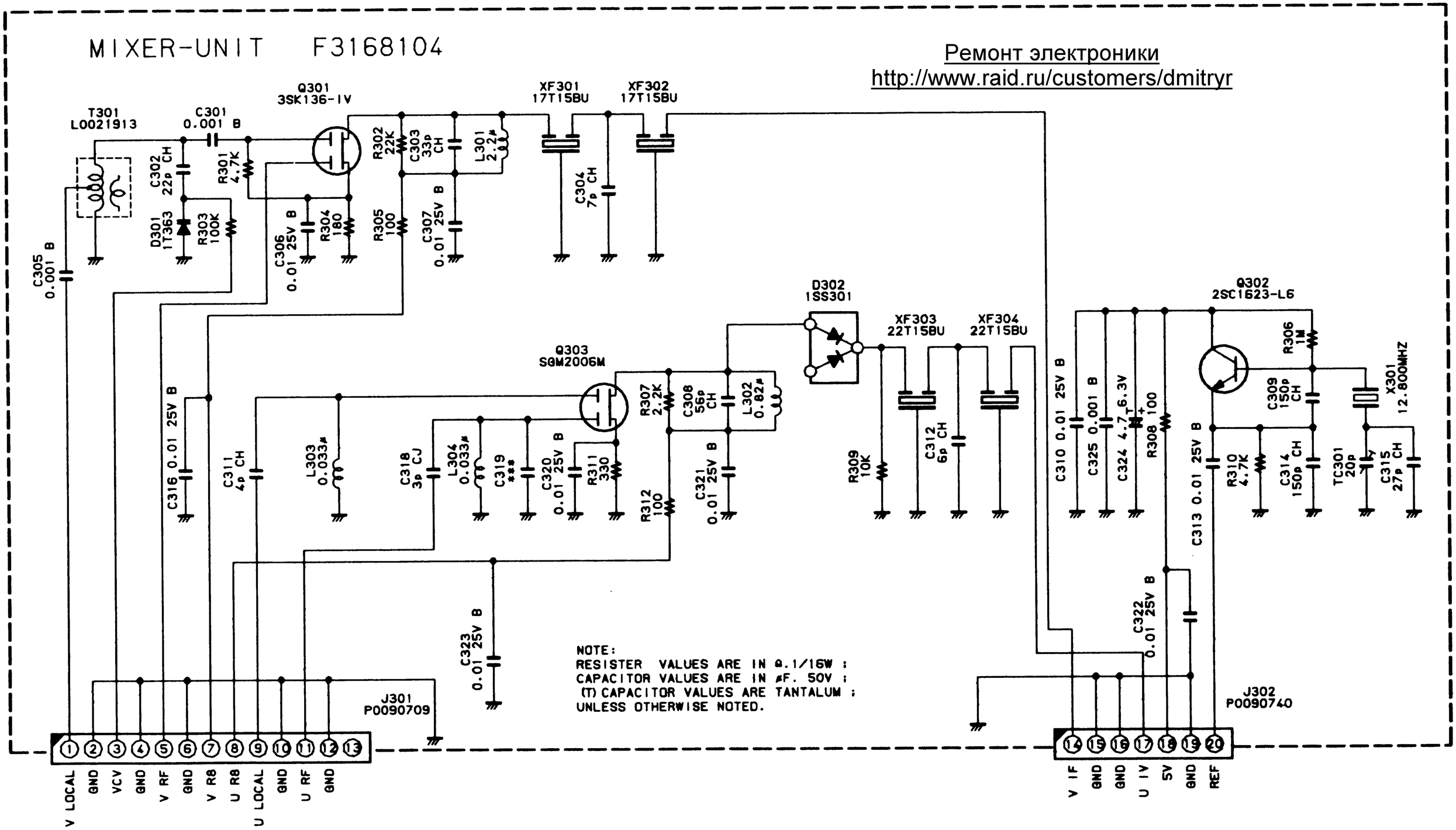

NOTE:
RESISTER VALUES ARE IN Ω.1/16W ;
CAPACITOR VALUES ARE IN μF. 50V ;
(T) CAPACITOR VALUES ARE TANTALUM ;
UNLESS OTHERWISE NOTED.

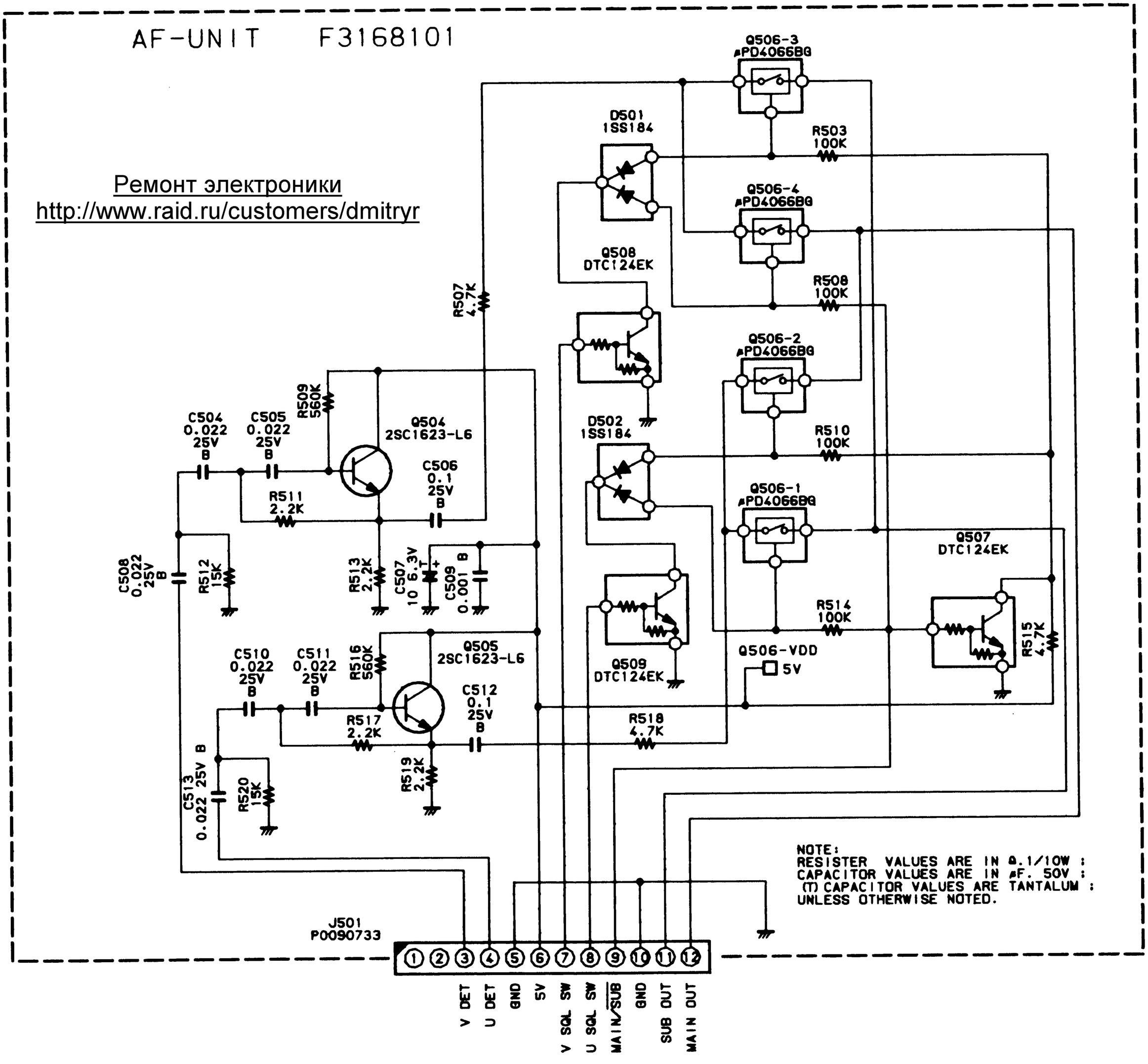
AF-UNIT F3168101
Ремонт электроники
http://www.raid.ru/customers/dmitryr
Q506-3
μPD4066BG
D501
1SS184
R503
100K
Q506-4
μPD4066BG
Q508
DTC124EK
R508
100K
R507
4.7K
Q506-2
μPD4066BG
R509
560K
C504
0.022
25V
B
C505
0.022
25V
B
Q504
2SC1623-L6
D502
1SS184
R510
100K
C506
0.1
25V
B
R511
2.2K
Q506-1
μPD4066BG
Q507
DTC124EK
C508
0.022
25V
B
R512
15K
R513
2.2K
C507
10 6.3V
C509
0.001 B
R514
100K
R515
4.7K
Q506-VDD
5V
Q509
DTC124EK
C510
0.022
25V
B
C511
0.022
25V
B
R516
560K
Q505
2SC1623-L6
C512
0.1
25V
B
R517
2.2K
R518
4.7K
R519
2.2K
C513
0.022 25V B
R520
15K
NOTE:
RESISTER VALUES ARE IN Ω.1/10W :
CAPACITOR VALUES ARE IN μF. 50V :
(T) CAPACITOR VALUES ARE TANTALUM :
UNLESS OTHERWISE NOTED.
J501
P0090733
1 2 3 4 5 6 7 8 9 10 11 12
V DET
U DET
GND
5V
V SQL SW
U SQL SW
MAIN/SUB
GND
SUB OUT
MAIN OUT

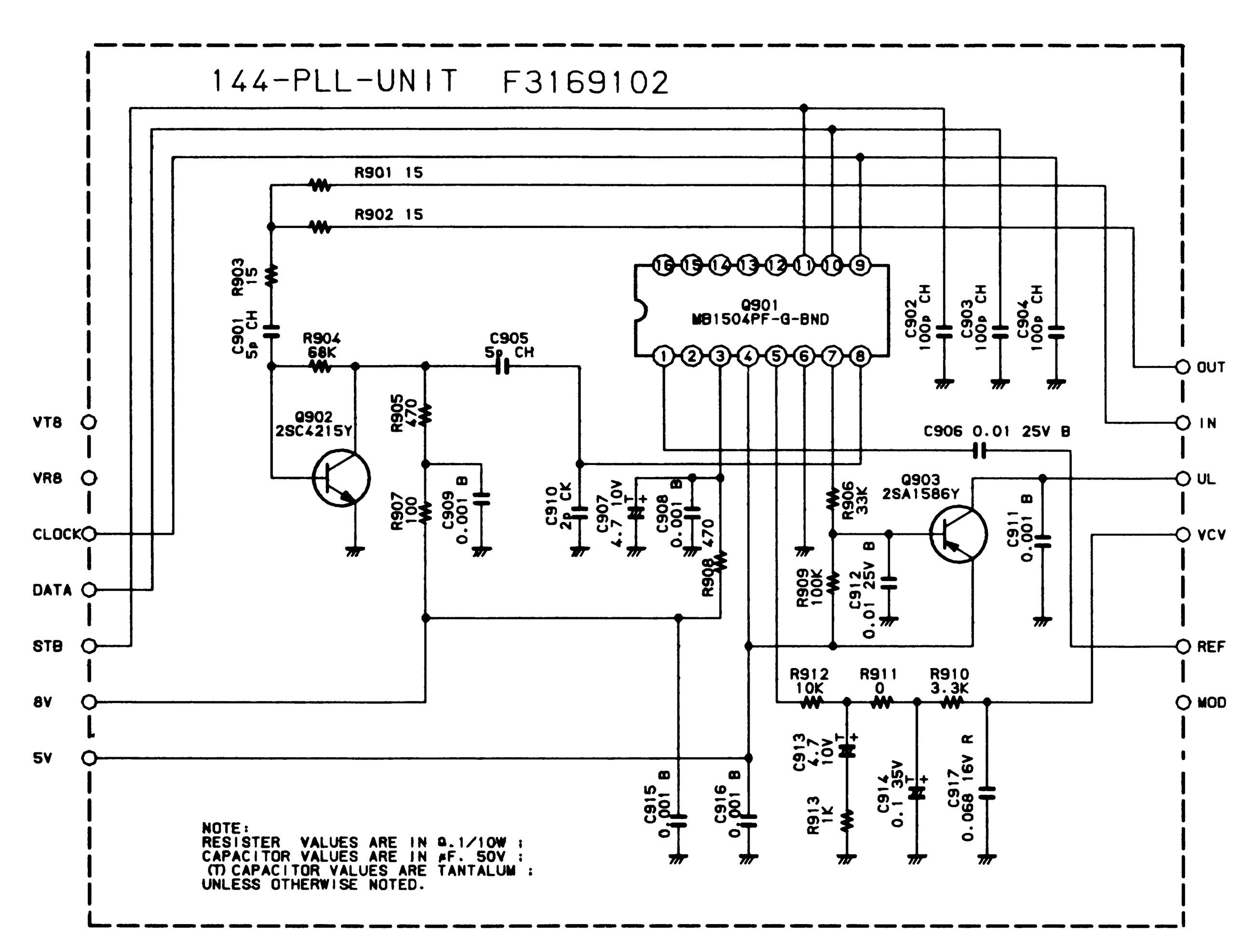

Ремонт электроники
http://www.raid.ru/customers/dmitryr